MOTOR CITY ROCKERZ INSTALLATION MANUAL

Part # ROCKRHYD[.....]
ROCKRELE[.....]
(ALL COLORS)

TABLE OF CONTENTS

Equipment Specifications ..... Page: 1
Equipment Features ..... Page: 1
Suggested Tools and Installation Materials ..... Page: 1
Installation Instructions ..... Page: 2
Electrical Installations ..... Page: 7
Hydraulic Installations ..... Page: 8
Plumbing Installations ..... Page: 9
Start-Up Procedures ..... Page: 10
Maintenance ..... Page: 10

Equipment Specifications

	HYDRAULIC DRIVE ROCKRHYD[…….]	ELECTRIC DRIVE ROCKRELE[…….]
ELECTRICAL	**N/A**	**MOTORS: 2 HP (2 X 1.0 HP)** **9.2-4.2 AMP @ 208-460 VAC, 3 PH** **UL® RECOGNIZED, CSA CERTIFIED, CE MARK, IEC IP 55**
HYDRAULIC	**3 GPM @ 1000 PSI**	**N/A**
PNEUMATICS	**N/A**	**N/A**
WATER	**RECLAIMED OR FRESH:** **2 GPM @ 40 PSI**	**RECLAIMED OR FRESH:** **2 GPM @ 40 PSI**

Equipment Features

- ☐ Color Skinz™ Snap On Structure Wrap
- ☐ Bulk head utility connection fittings
- ☐ Available in either C-Channel Foam or Cotton Cloth™ wash material

Suggested Installation Tools and Materials

- ☑ Hammer Drill with 5/8” Drill Bit
- ☐ Sledge Hammer
- ☐ Set of Standard Combo Wrenches
- ☐ Measuring Tape
- ☐ (8) Wedge Anchor Bolts 5/8” x 6”
- ☐ Safety Goggles
- ☐ Torpedo Level
- ☐ Safety Goggles

© Motor City Wash Works, Inc. 48285 Frank, Wixom Michigan 48393 U.S.A. Phone: 248.313.0272 ▪ Fax: 248. 313.0271

Notes and Safety Symbols

Where necessary, important points will be highlighted in this manual, using the following symbols:

NOTE: **PROVIDES FURTHER INFORMATION!**

STOP! **PRECAUTION TO AVOID EQUIPMENT MALFUNCTION OR ERROR!**

WARNING! **DANGEROUS SITUATION WHICH MAY CAUSE EQUIPMENT DAMAGE, PERSONAL INJURIES OR FATALITIES!**

Always follow all "Notes", "Warnings" and instructions. Failure to do so may have serious consequences on the overall performance of the equipment and/or the safety of the people working on the equipment!

Installation Procedure

☑ **Upon** receiving your MCWW equipment, open all boxes and crates and verify that you have all the required components and there is no damage to the equipment. Verify that you have all your installation materials.

PLEASE COMMUNICATE WITH YOUR LOCAL MOTOR CITY WASH WORKS REPRESENTATIVE FOR ANY DAMAGE TO YOUR EQUIPMENT!

☐ **Remove** packaging material covering your **MOTOR CITY ROCKERZ™** bring them in the wash in the area where it will be installed and verify that the area is sufficiently large for the **ROCKERZ™ WORKING ENVELOPE** and **DIMENSIONS** (see Picture #1 though #4).

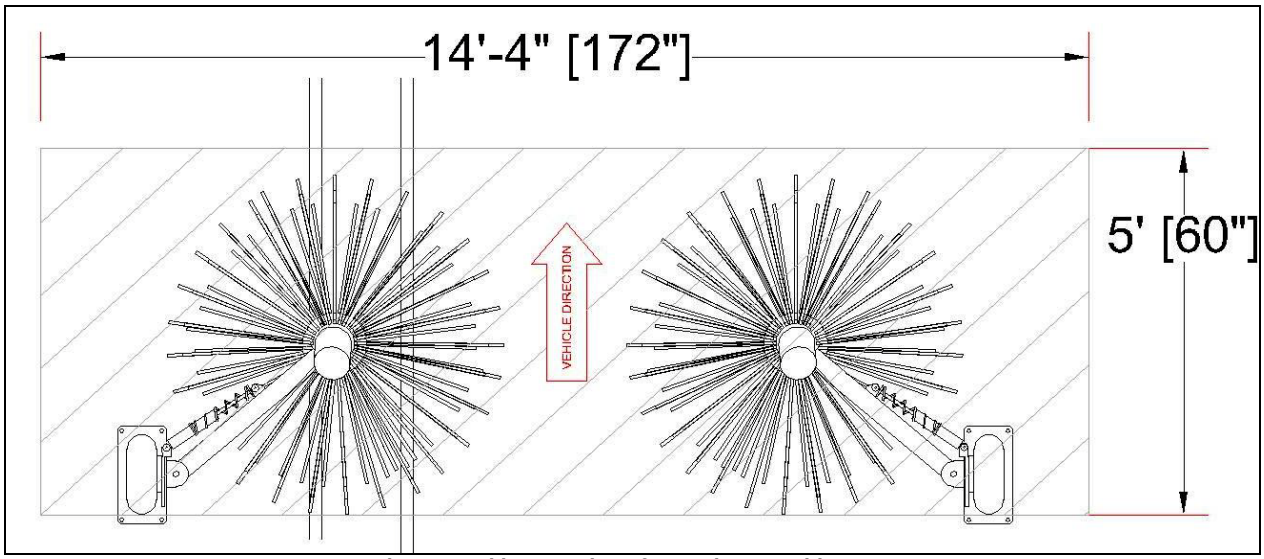

Pic #1: Working Envelope for Rockerz™ With Foam

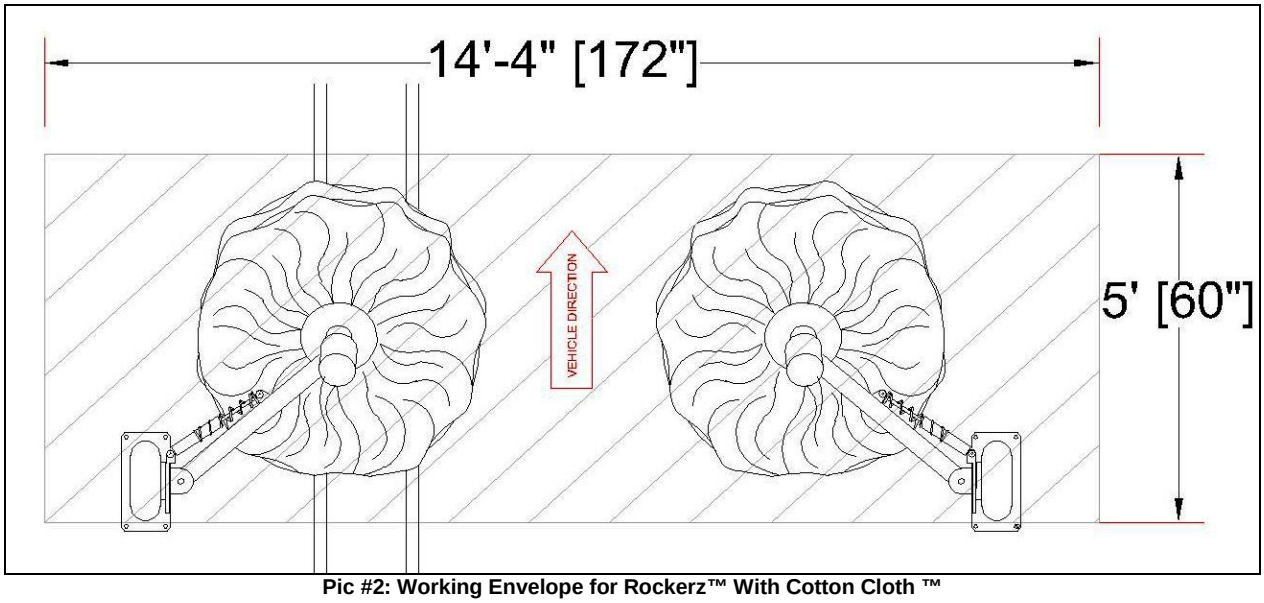

Pic #2: Working Envelope for Rockerz™ With Cotton Cloth ™

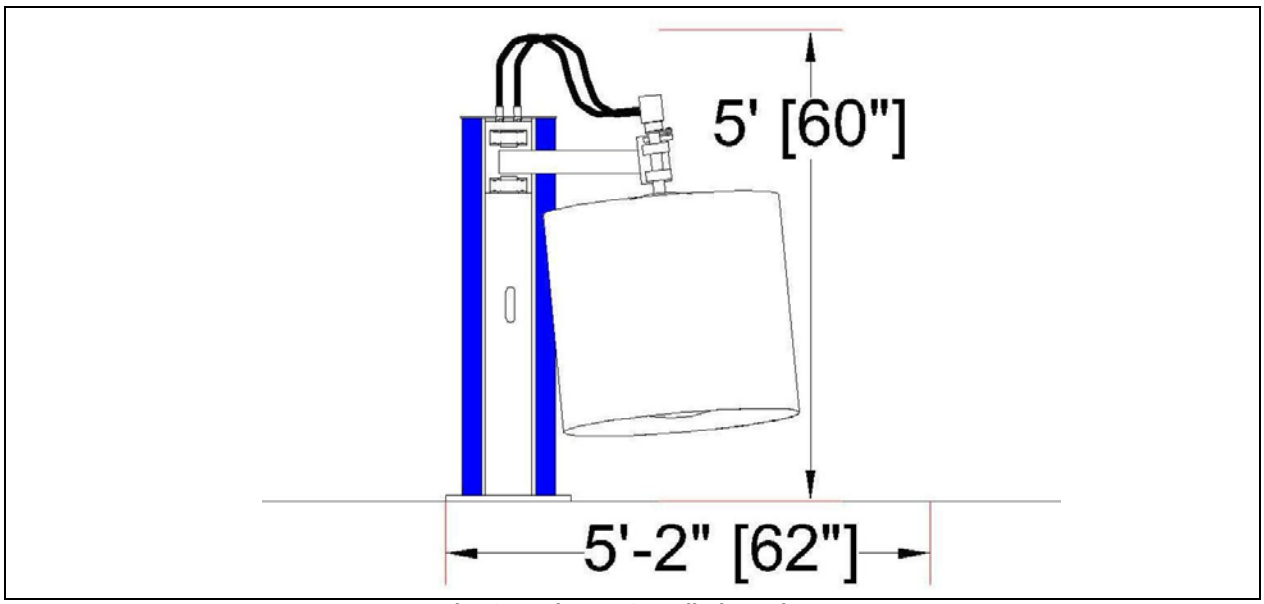

Pic #3: Rockerz™ Overall Dimensions

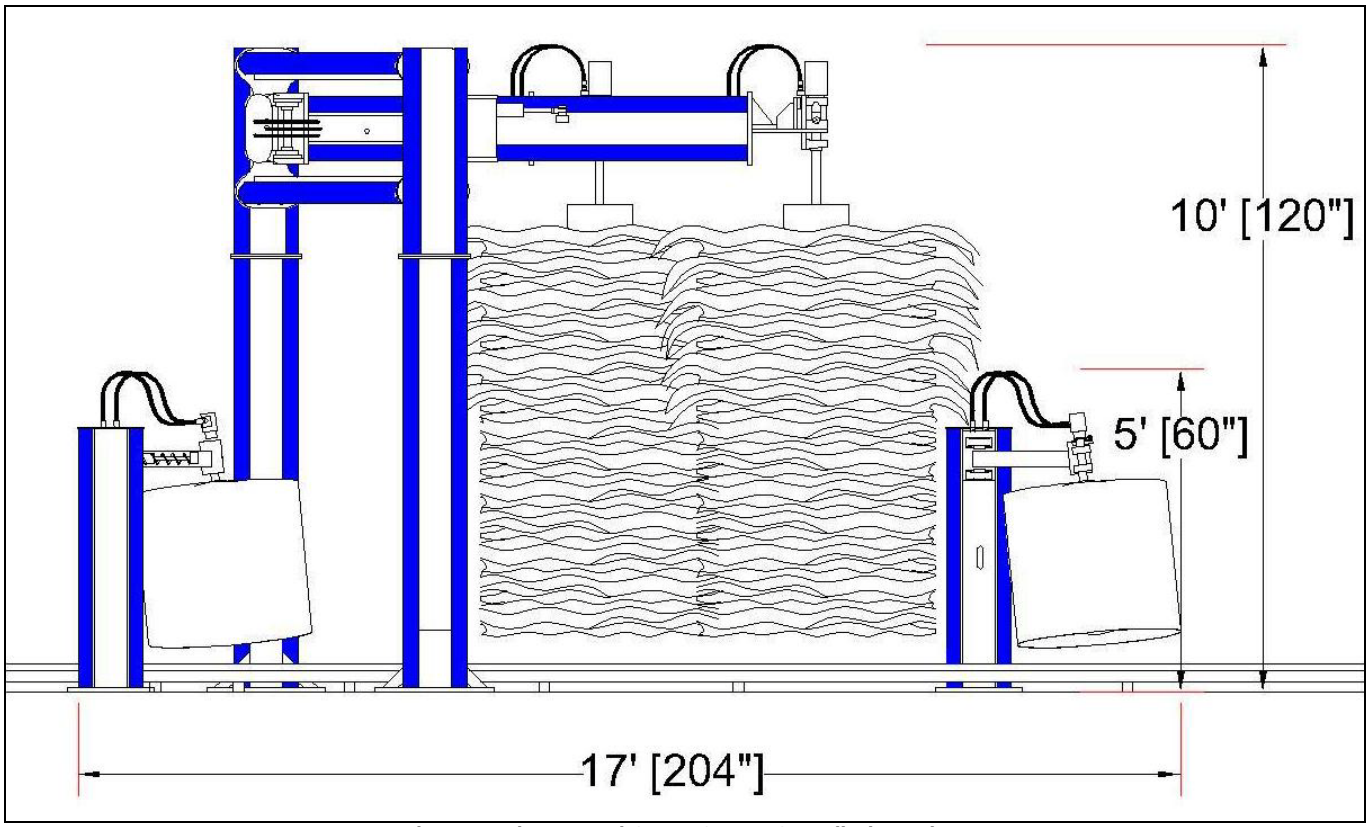

Pic #4: Rockerz™ and Cross-Over™ Overall Dimensions

☐ **Remove** the **DRIVER'S SIDE ROCKERZ™** from the pallet, locate in place and position the back of the leg **45 INCHES** from the **INSIDE EDGE OF THE INSIDE GUIDE RAIL** (see Picture #5). Position the base plate parallel to the conveyor guide rail and secure the base plate with four 5/8" x 6" wedge anchor bolts.

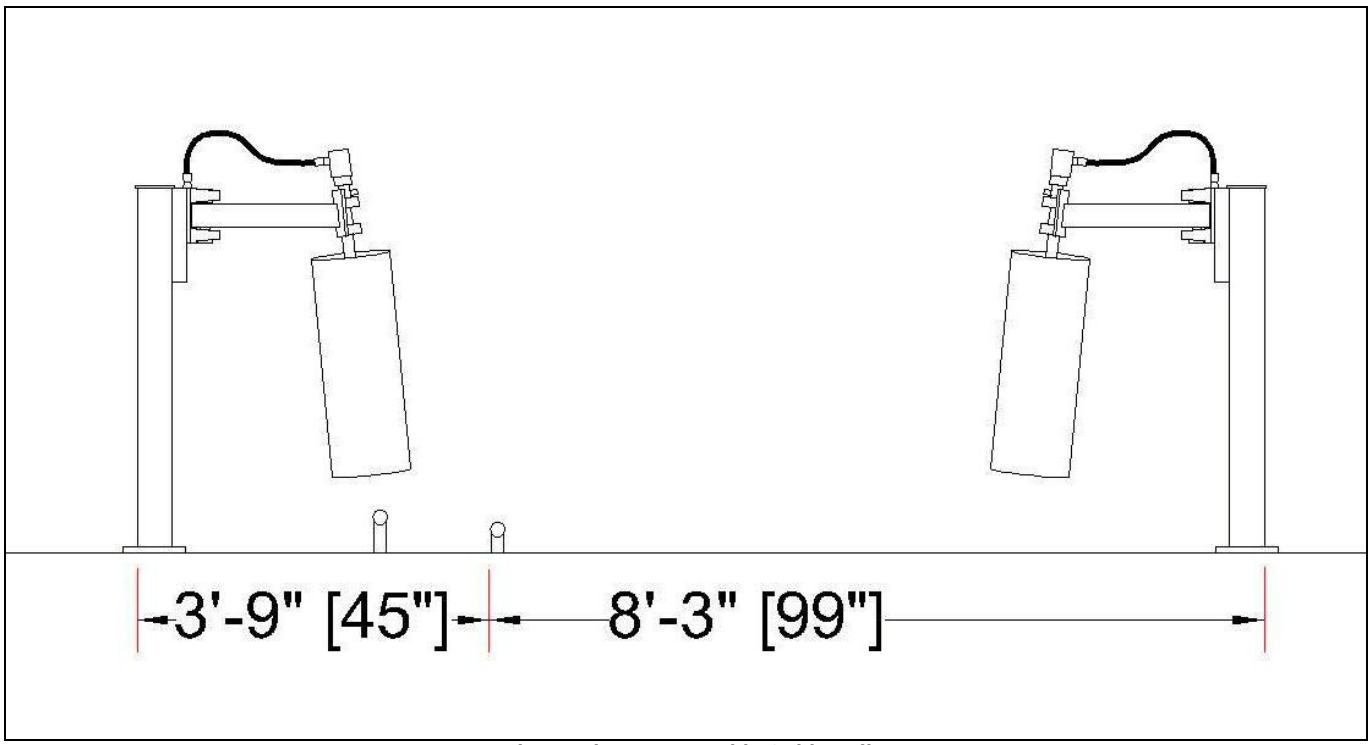

Pic #5: Distance to Inside Guide Rail

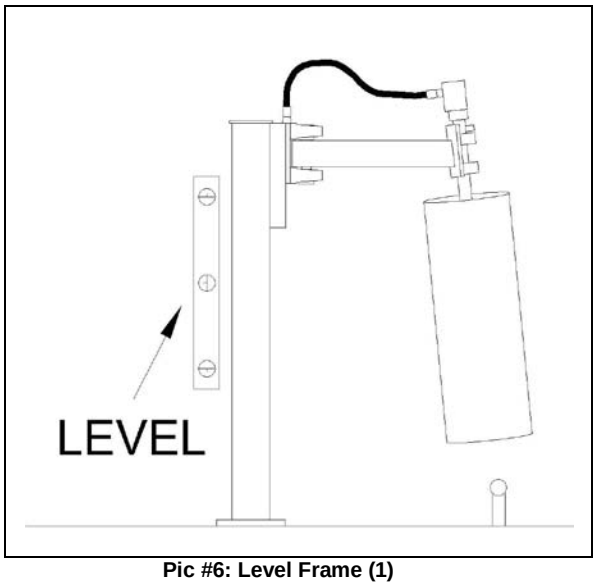

Pic #6: Level Frame (1)

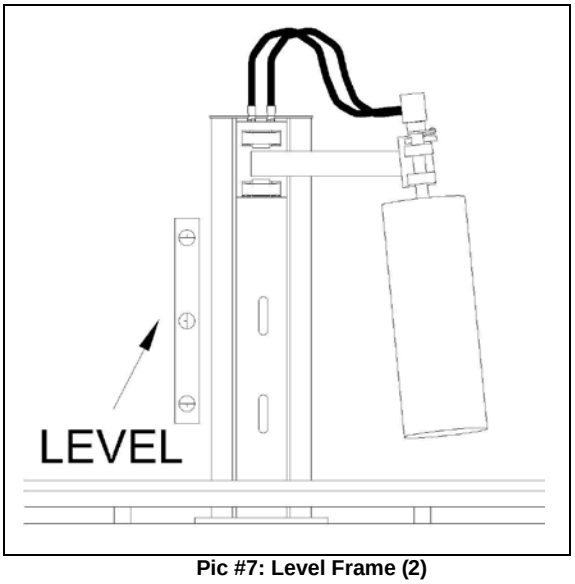

Pic #7: Level Frame (2)

☐ **Level** the frame in both directions (see Picture #6 and #7). Locate the **PASSENGER'S SIDE ROCKERZ™** and position the back of the leg **99" FROM THE INSIDE EDGE OF THE INSIDE GUIDE RAIL** (see Picture #5). Secure with 5 anchor bolts and level as previously shown. Secure the shock to the arm.

☐ **Remove** the shipping straps from both arms and verify the height of each hub: The bottom of the hub should be between **8 TO 10 INCHES FROM THE FLOOR** (see Picture #8).

STOP!

DO NOT SET THE TOP OF THE HUB HIGHER THAN 36" OFF THE FLOOR

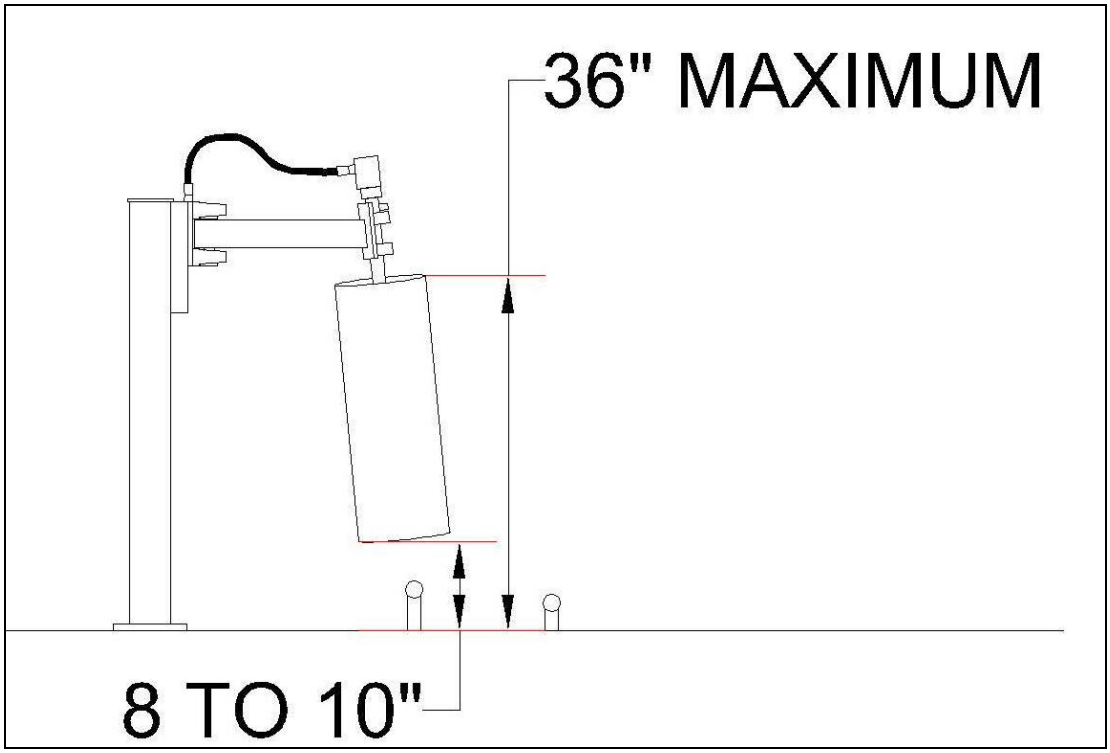

Pic #8: Hub Height from Floor

☐ **Locate** the boxes containing the **COLOR SKINZ™** covers and install on each leg..

Pic #9 Color Skinz™

SELECT THE PROPER COLOR SKINZ™ COVER. SNAP ONE SIDE OF THE LIP, SLIDE THE COVER AROUND THE LEG AND FINALLY SNAP THE SECOND LIP PAST THE EXTRUSION EDGE (see Picture #10)

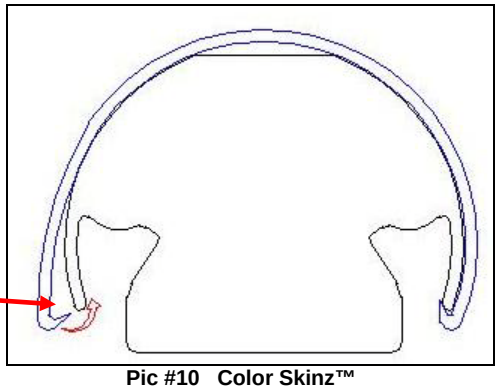

Pic #10 Color Skinz™

Cotton Cloth™ Loading Instructions

☐ **Unbolt** the hub from the wheel and remove the two compression plates from the top of the hub. Verify that the plastic spacers are correctly installed in each hub channel (See Picture Below)

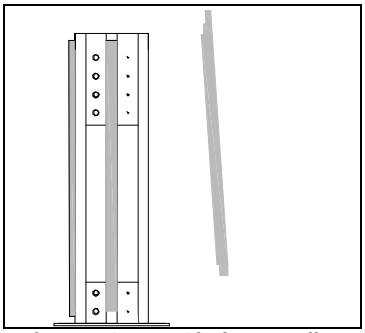

Pic #11: Cotton Cloth™ Loading

☐ **Open** the washing material boxes and load in first **FOUR 3/4" SPACERS** and **ONE COTTON CLOTH™** onto the bottom of the hub assembly. Load **THREE SPACERS** on top of the cloth and slide on an additional **COTTON CLOTH™** (see Picture #11). Alternate between three spacers and the cloth rings until you have **10 COTTON CLOTH TOTAL**. Terminate with three spacers. Reinstall the two compression plates and reinstall the hub back to the wheel shaft.

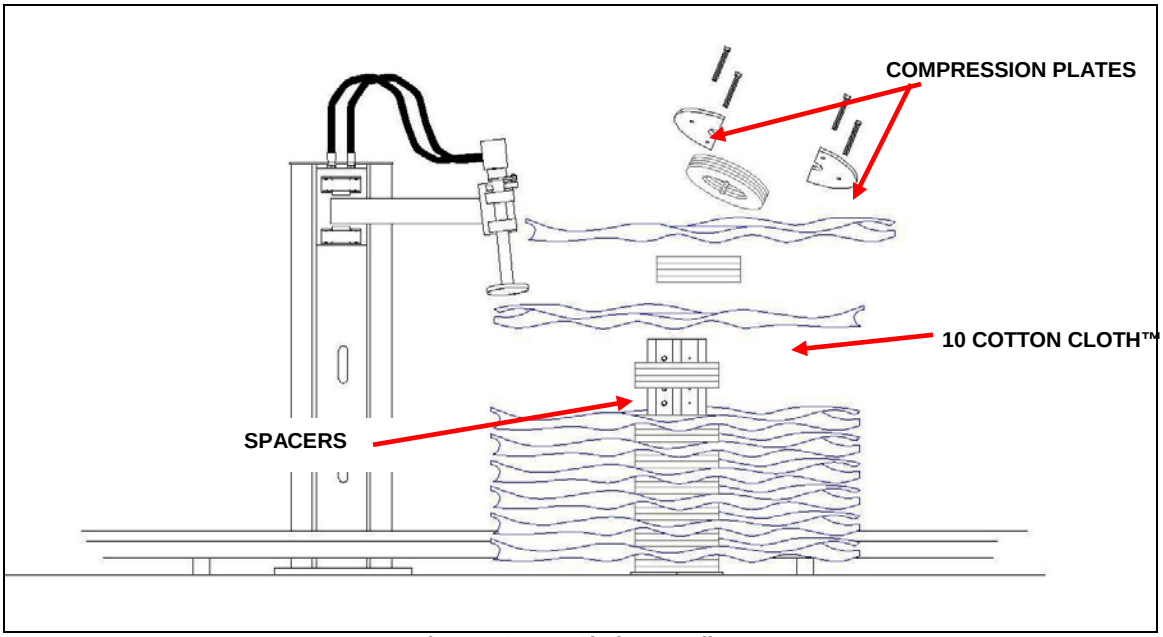

Pic #11: Cotton Cloth™ Loading

© Motor City Wash Works, Inc. 48285 Frank, Wixom Michigan 48393 U.S.A. Phone: 248.313.0272 ▪ Fax: 248. 313.0271

Star Foam Loading Instructions

☐ **Unscrew** the hub from the wheel and remove the two compression plates from the top of the hub.

☐ **Open** the washing material boxes and load in **TWO 10" BUNS** and **ONE 8" BUN** onto the hub assembly (see Picture below). Reinstall the two compression plates and reinstall the hub back to the wheel shaft.

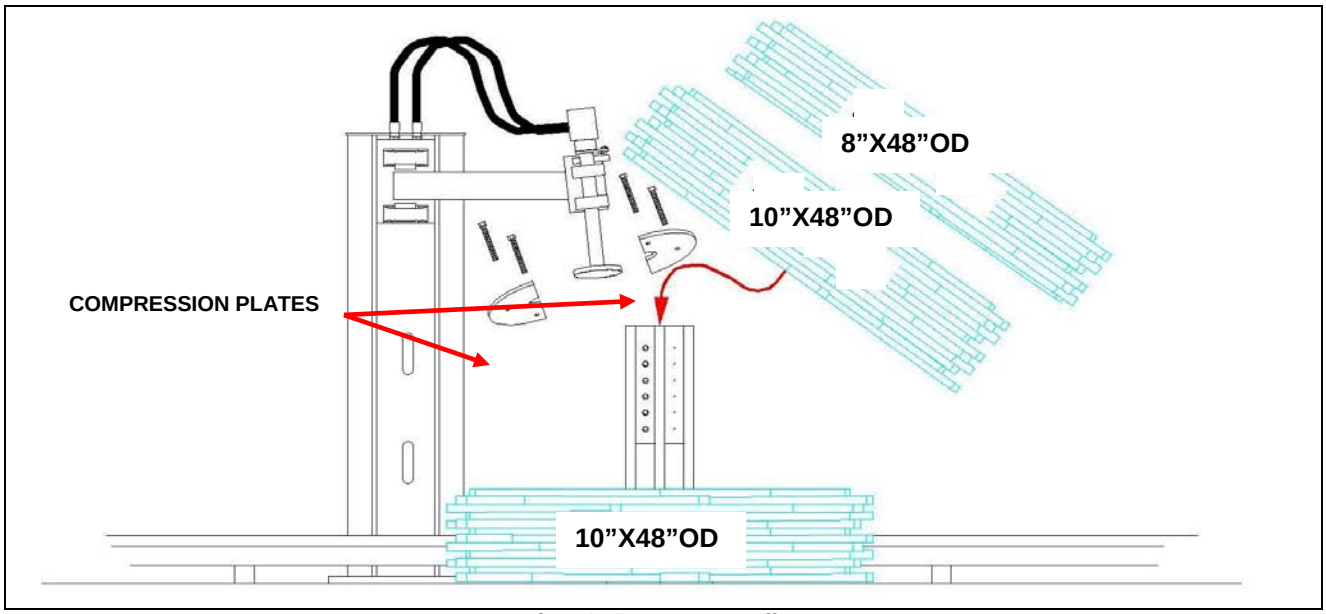

Pic #12: Star Foam Loading

C-Channel Foam Loading Instructions

☐ **Open** the washing material boxes and load in the foam onto the bottom hub as shown in Picture #13 and 14.

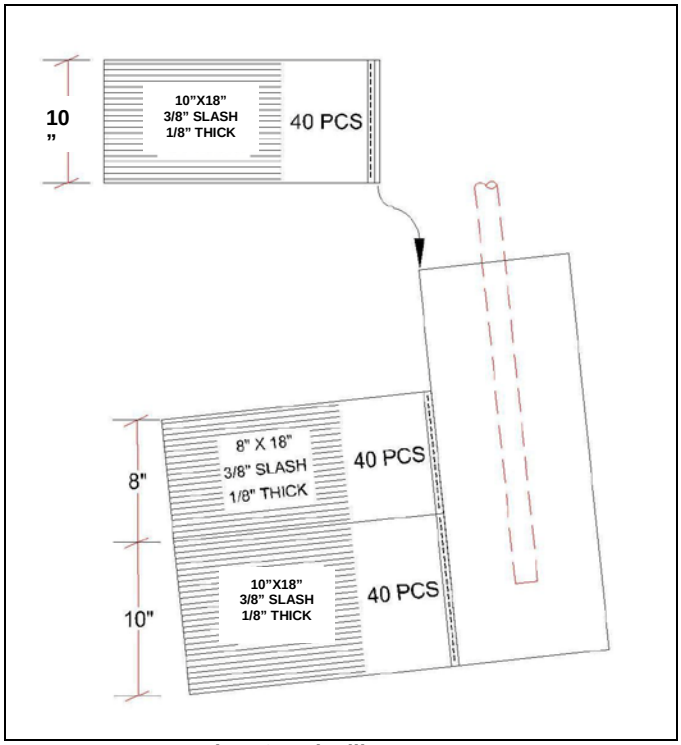

Pic #13: Hub Fill

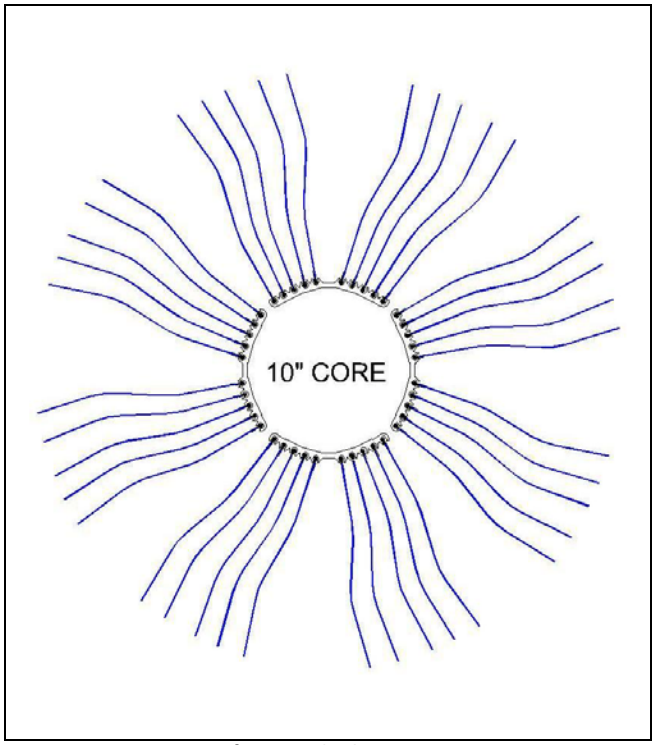

Pic #14: 10" Core

Electrical Installation:

☐ **If** you have purchased the **ELECTRIC DRIVE MCWW ROCKERS™,** connect each **1.0 HP MOTOR** to a separate starter unit. Each motor has to be protected with an **OVERLOAD RELAY SET AND THE MOTOR RATED FULL LOAD CURRENT FOR THE PROPER VOLTAGE.**

NOTE: **BOTH MOTOR ELECTRICAL CABLES ARE NOT CONNECTED TO THE MOTOR LEADS WHEN SHIPPED FROM THE MCWW FACTORY. OPEN THE MOTOR CONNECTION BOXES AND CONNECT TO THE MOTOR LEADS FOLLOWINGTHE APPROPRIATE CONNECTION DIAGRAM BELOW OR ON THE MOTOR PLATE (PICTURE #15) FOR PROPER VOLTAGE**

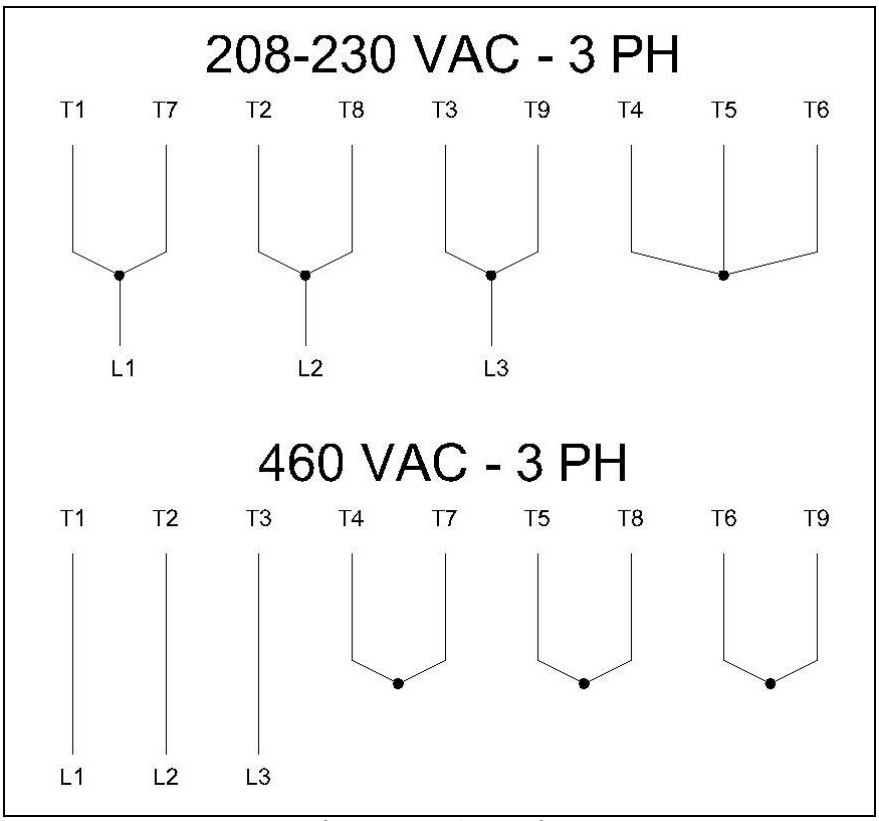

Pic #15 Motor Connection

WARNING!

EACH MOTOR HAS TO BE PROTECTED WITH AN OVERLOAD RELAY SET AND THE MOTOR RATED FULL LOAD CURRENT FOR THE PROPER VOLTAGE:

4.6 AMPS @ 208 VAC - 3PH
4.2 AMPS @ 230 VAC – 3PH
2.1 AMPS @ 460 VAC – 3PH

Hydraulic Installation:

☐ **If** you have purchased the **HYDRAULIC DRIVEN MCWW ROCKERZ™,** it requires a **SUPPLY CAPABLE OF AT LEAST 3 GPM @ 1000 PSI** connected to two hoses (one pressure and one return line)

☐ **Use HYDRAULIC SCHEMATIC** shown on Picture #16 as an installation guide.

WARNING!

DO NOT OPERATE YOUR MCWW ROCKERZ™ SIDE WHEEL UNIT WITH A HYDRAULIC SYSTEM OPERATION AT A PRESSURE ABOVE 1250 PSI

OPERATING AT PRESSURES ABOVE 1250 PSI MAY AFFECT THE PERFORMANCE OF THE EQUIPMENT AND LEAD TO PREMATURE WEAR OR MAJOR DAMAGE TO THE ROCKERZ™ HYDRAULIC SYSTEM OR ITS COMPONENTS

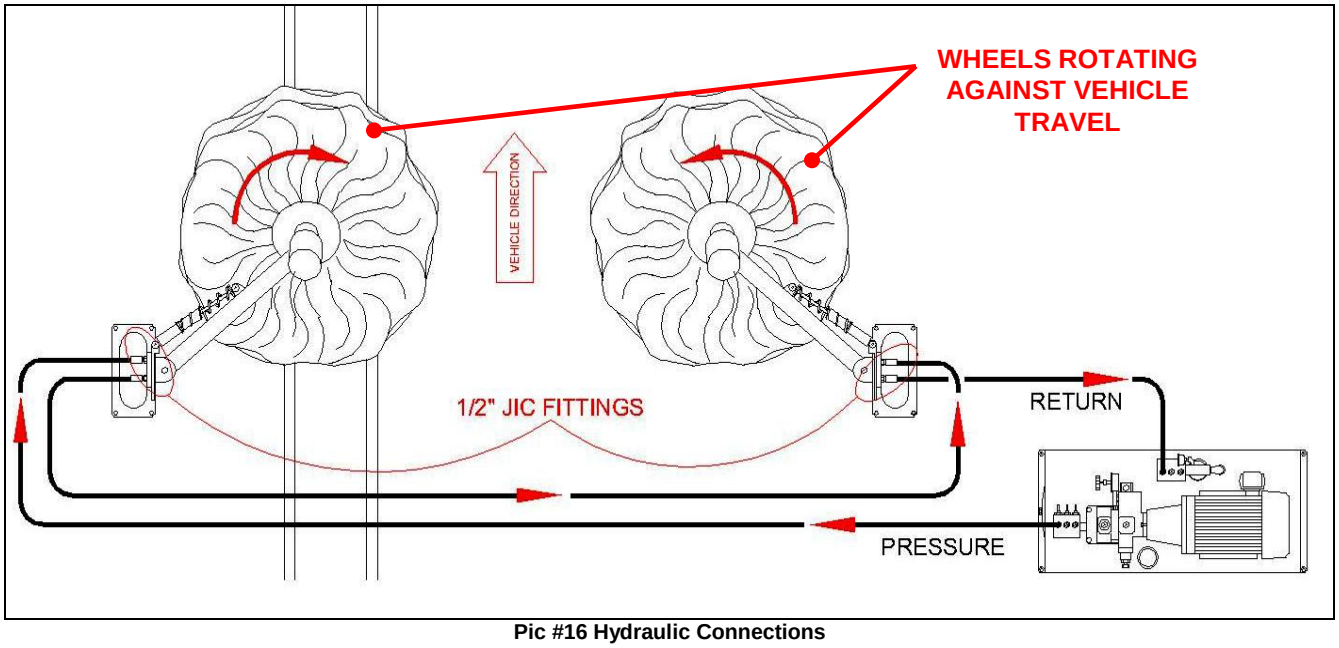

Pic #16 Hydraulic Connections

Water Feed Installation:

☐ **Your MCWW ROCKERZ™** requires a water supply of 2 to 3 GPM for both wheels. Reclaim or fresh water can be used. Install a 1/2" water hose from a dilution station to the **WATER MANIFOLD** (Picture # 17) located inside the leg.

NOTE:
USE 3/4" NPT HOSE
IF THE LENGTH OF THE HOSE BETWEEN
THE DILUTIONSTATION AND YOUR
MCWW ROCKERZ™ IS GREATER THAN 50 FEET

NOTE: **THE DILUTION STATION SHOWN IN PICTURE #14 IS NOT INCLUDED WITH YOUR ROCKERZ™ SIDE WHEELS UNIT**

IT CAN BE PURCHASED SEPARATELY THROUGH YOUR LOCAL MCWW DISTRIBUTOR
PART# APPLDLNSTN004

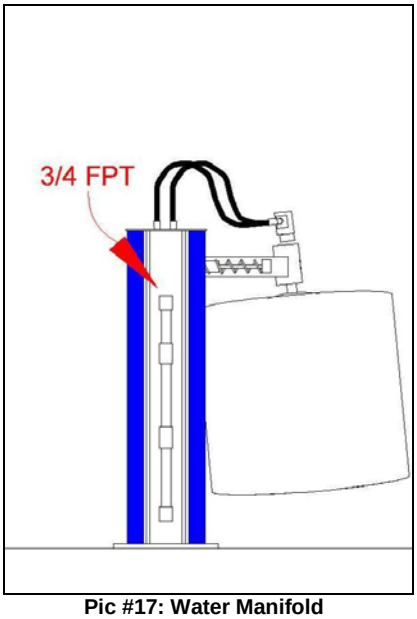

Pic #17: Water Manifold

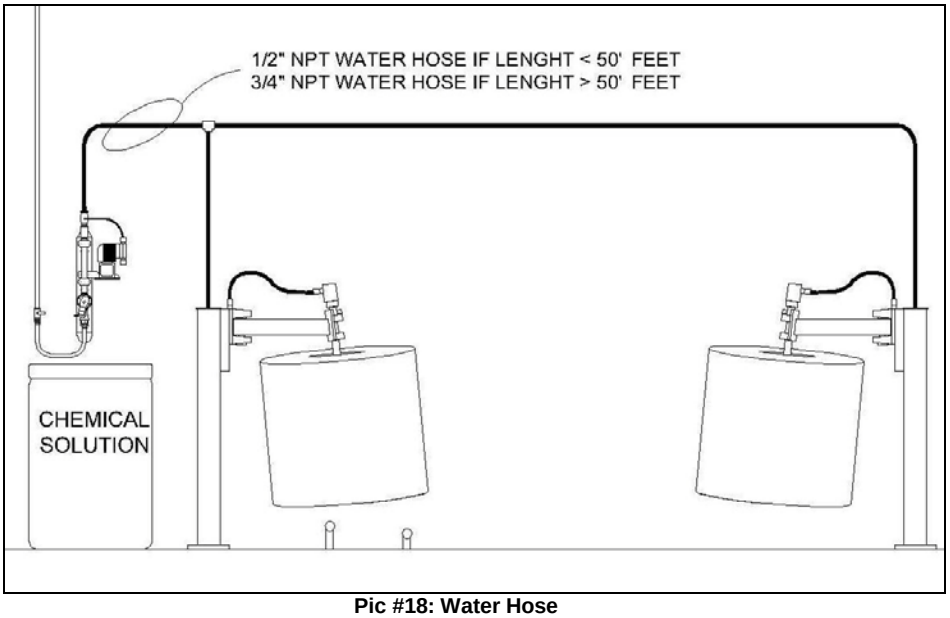

Pic #18: Water Hose

Start Up and Operation:

☐ **Manually turn on** your **HYDRAULIC POWER UNIT** and set the hydraulic flow control valve for a **WHEEL SPEED OF 88 RPM** for a **ROCKERZ™ SIDE WHEEL** using **COTTON CLOTH™.**

If your **ROCKERZ™ SIDE WHEELS** are equipped with **C-CHANNEL FOAM,** set the **WHEEL SPEED** between **88 to 100 RPM.**

☐ **Check** all hydraulic lines for leaks. Turn the hydraulic power unit OFF.

NOTE: **IF THE ROCKERZ™ SIDE WHEELS ARE ELECTRIC DRIVE, THE WHEEL SPEED IS PRESET AT 88 RPM. USING A VARIABLE SPEED DRIVE (VFD) INSTEAD OF A STARTER UNIT ALLOWS FOR WHEEL SPEED ADJUSTMENT. REFER TO RECOMMENDATIONS ABOVE FOR OPTIMAL WHEEL SPEED ADJUSTMENT**

☐ **Manually turn on** the **WATER DILUTION STATION** and confirm that the **SPRAY NOZZLE COVERS** the wheel from top to bottom**.** Turn OFF your dilution station. Consult your MCWW Dilution Station Installation manual for adjustment.

☐ **Run** a car through the wash and verify the proper operation of both **ROCKERZ™ SIDE WHEELS.** Confirm wheel speed under vehicle load with the **HYDRAULIC POWER UNIT SET AT 1000 PSI.** Open hydraulic flow control valve or increase hydraulic power unit pressure if needed to reach recommended speed value previously specified. **DO NOT EXCEED 1250 PSI AT THE HYDRAULIC UNIT!**

Maintenance:

DAILY:

- Check for hydraulic leaks, chaffed hoses electrical cable, etc.
- Visually inspect for any sign of wear.
- Move the arms manually and duplicate its regular motion and look for abnormalities: A loose fastener may allow some parts to move or rub and may create a dark “stain” running down the equipment.
- Start the day with a “TEST WASH” and check for proper operation.
- While you are watching the TEST WASH, check for clogged nozzles. If a nozzle is clogged, remove the nozzle body (see Picture #15) and clean the nozzle by inserting a small piece of wire (a small paper clip wire can do fine!) in the nozzle opening.
- Check for proper coverage of the two Streamer™ Foamers if applicable.
- Check for the overall performance of the equipment on the vehicle: Profiling, cleaning, etc.
- Wash down your equipment and the surrounding area at the end of each day.

MONTHLY:

All MCWW equipment is assembled with the highest quality bearings and have been factory pre-lubricated, therefore, they do not require supplemental grease for the first month of operation.
Use any lithium-based NLGI #2 grease (ex: Exxon Mobil MOBILITH AW2).

WARNING!
OVERLUBRICATION IS A MAJOR CAUSE OF BEARINGFAILURES!
LUBRICATE CONSERVATIVELY!

- After the first month of operation, grease each bearing (see Picture #16 and 17).
- Wash your equipment with a solution made of a mild degreaser and water. Rinse thoroughly.
- Perform daily maintenance.

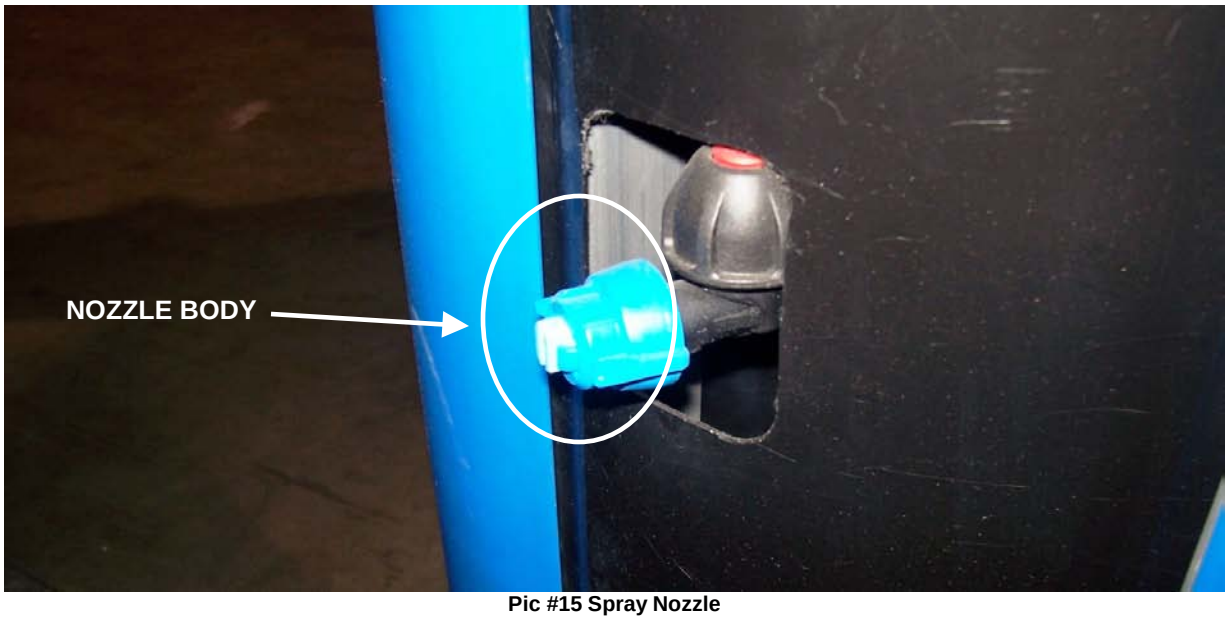

Pic #15 Spray Nozzle

Pic #16: Wheel Shaft Bearings

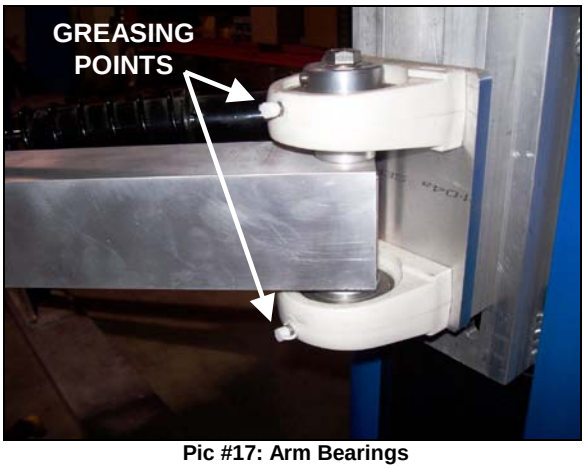

Pic #17: Arm Bearings

Warranty and Return Procedure:

Motor City Wash Works warrants this product to be free of defect in material and/or workmanship for a period of **one year.** During the warranty period MCWW will at its discretion, at no charge to the customer, repair or replace this product if found defective, with a new or refurbished unit, not to include costs of removal or installation. Any product returned to MCWW for warranty has to have a **Return Material Authorization Number**. All shipping costs to MCWW are assumed by the customer. This is only a summary of **MCWW's Limited Warranty**. Please, communicate with MCWW for our complete warranty.

Prior to returning any product to MCWW, the customer must call in for a **Return Material Authorization Number** and a copy of our **Return Material Authorization** Form must be completed. The **RMA** number must be written clearly on the outside of the shipping package and a copy of the form must be included in the package.

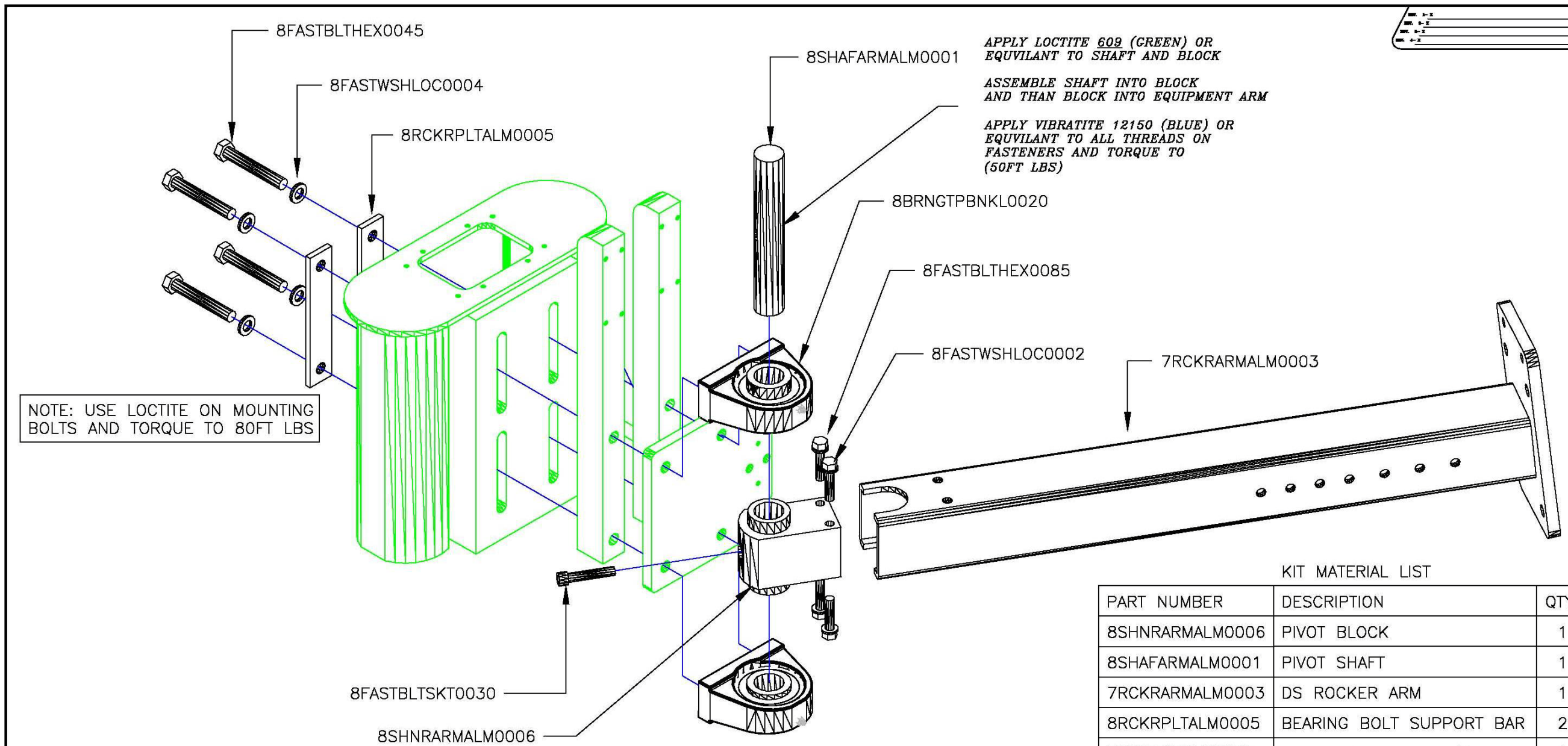

KIT MATERIAL LIST

PART NUMBER	DESCRIPTION	QTY
8SHNRARMALM0006	PIVOT BLOCK	1
8SHAFARMALM0001	PIVOT SHAFT	1
7RCKRARMALM0003	DS ROCKER ARM	1
8RCKRPLTALM0005	BEARING BOLT SUPPORT BAR	2
8FASTBLTHEX0045	HHCS 1/2–13 X 3–½ ARMOR	4
8FASTWSHLOC0004	LOCK WASHER ½ SS18–8	4
8FASTBLTHEX0085	HHCS 3/8–16 X 1 ARMOR 18–8	4
8FASTWSHLOC0002	LOCK WASHER ⅜ SS18–8	5
8FASTBLTSKT0030	SHCS 3/8–16 X 2 ARMOR	1
8BRNGTPBNKL0020	NICKEL BEARING 1–¼ TB	2

NOTES:
XXXXX

Tools List:
1– XXXXX
2– XXXXX
3– XXXXX
4– XXXXX
5– XXXXX
6– XXXXX
7– XXXXX
8– XXXXX

.XX ± .010
.XXX ± .005
.XXXX ± .001
Fract. ± 1/32"
Unless otherwise specified

Scale: 1:X in

MasterCAM # XXX Date:

B

Drawn By: DJC Date: 01/08/14

Modified By: XXX Date:

Part Number: 7SHFKTNKLDS0005

Description: DS ROCKER NICKEL BEARING/ARM UPGRADE REPLACEMENT KIT (FIELD INSTALL)

MECHANICAL TEMPLATE

Support Documents:

© Motor City Wash Works, Inc. 48285 Frank, Wixom Michigan 48393 U.S.A. Phone: 248.313.0272 • Fax: 248. 313.0271
www.motorcitywashworks.com

REVISION 2.3 10-03-10

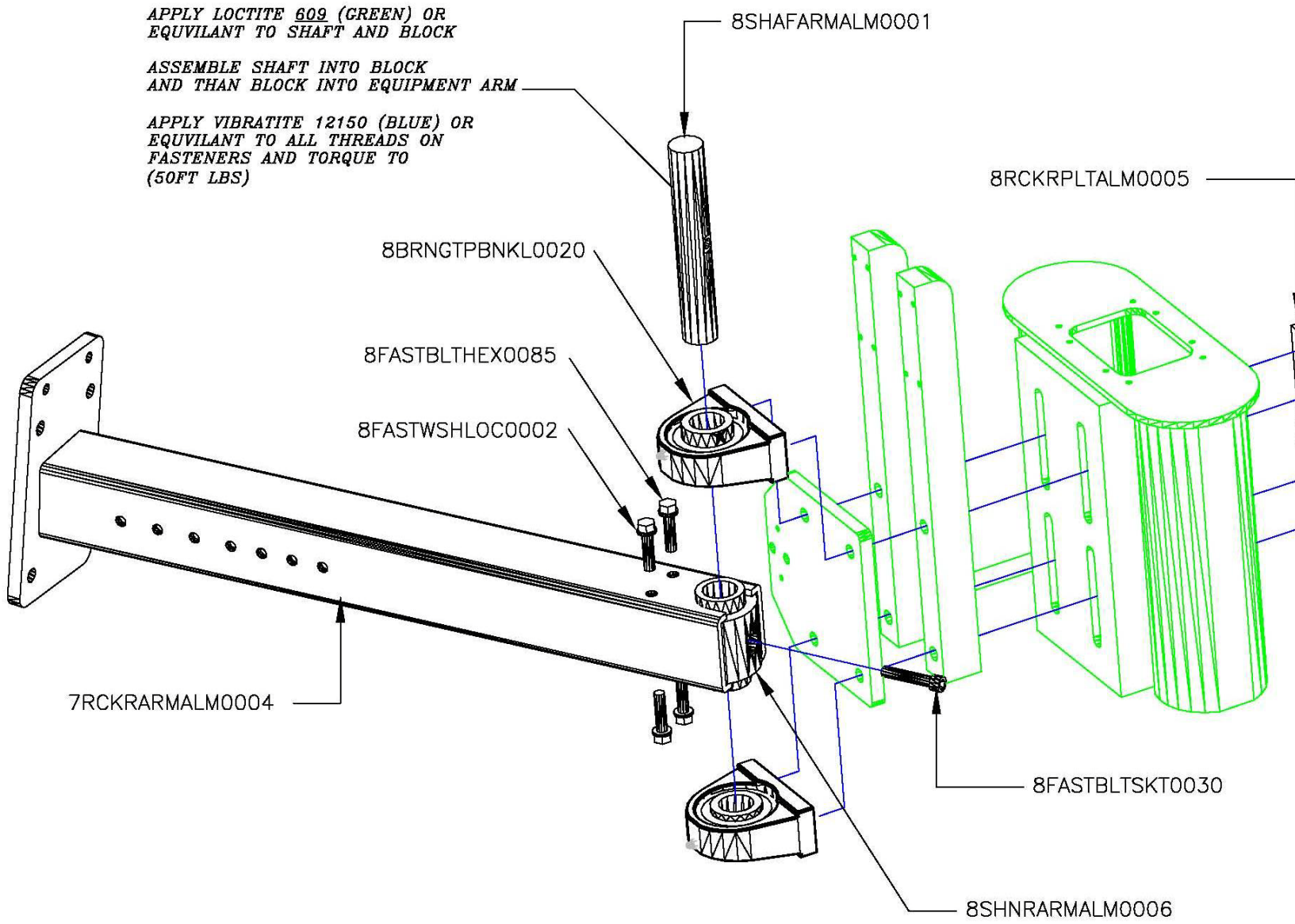

KIT MATERIAL LIST

PART NUMBER	DESCRIPTION	QTY
8SHNRARMALM0006	PIVOT BLOCK	1
8SHAFARMALM0001	PIVOT SHAFT	1
7RCKRARMALM0004	PS ROCKER ARM	1
8RCKRPLTALM0005	BEARING BOLT SUPPORT BAR	2
8FASTBLTHEX0045	HHCS 1/2–13 X 3–½ ARMOR	4
8FASTWSHLOC0004	LOCK WASHER ½ SS18–8	4
8FASTBLTHEX0085	HHCS 3/8–16 X 1 ARMOR 18–8	4
8FASTWSHLOC0002	LOCK WASHER ⅜ SS18–8	5
8FASTBLTSKT0030	SHCS 3/8–16 X 2 ARMOR	1
8BRNGTPBNKL0020	NICKEL BEARING 1–¼ TB	2

NOTES:
XXXXX

Tools List:
1– XXXXX
2– XXXXX
3– XXXXX
4– XXXXX
5– XXXXX
6– XXXXX
7– XXXXX
8– XXXXX

.XX ± .010
.XXX ± .005
.XXXX ± .001
Fract. ± 1/32"
Unless otherwise specified

Scale: 1:X in

MasterCAM # XXX | Date: | B | Drawn By: DJC | Date: 01/08/14 | Modified By: XXX | Date: | MECHANICAL TEMPLATE

Part Number: 7SHFKTNKLPS0005

Description: PS ROCKER NICKEL BEARING/ARM UPGRADE REPLACEMENT KIT (FIELD INSTALL)

© Motor City Wash Works, Inc. 48285 Frank, Wixom Michigan 48393 U.S.A. Phone: 248.313.0272 • Fax: 248. 313.0271
www.motorcitywashworks.com

REVISION 2.3 10-03-10